OHIO STEEL INDUSTRIES

610-24640/1084C

1200 LB STEEL FOLDING LOADING RAMPS

U.S. PATENT No. 5,645,394

READ AND FOLLOW ALL SAFETY RULES AND OPERATING INSTRUCTIONS BEFORE USING THIS EQUIPMENT

Assembled in the U.S.A. of domestic and imported components

303045 - REV C 10/15

Safety Rules

This is the safety alert symbol. It is used to alert you to potential personal injury hazards. Obey all safety messages that follow this symbol to avoid possible injury or death.

Read and understand all safety rules and operating instructions before using these loading ramps.

Follow all safety rules and operating instructions provided by manufacturer of equipment to be loaded when using loading ramps.

Never allow children or untrained persons to use loading ramps.

Never ride any vehicle up or down the loading ramps.

Never load or unload power equipment with its engine running.

Never stand in the path of equipment when loading or unloading with the ramps.

Always use on stable, level surfaces.

Always set the emergency brake and chock the tires of the loading vehicle to prevent any movement while loading or unloading the equipment.

Always attach straps between bumper of the truck and the center of the loading ramp to prevent kick back.

Check product for worn, loose, or damaged parts before each use. If any damage is present, repair the product before using.

Check product for loose or missing fasteners before each use. Tighten or replace fasteners as needed before using.

Never exceed load capacity of loading surface (e.g. tailgate). If unknown, consult with the manufacturer to find the maximum load capacity.

Never exceed load capacity of 600 pounds per ramp.

Carton Contents

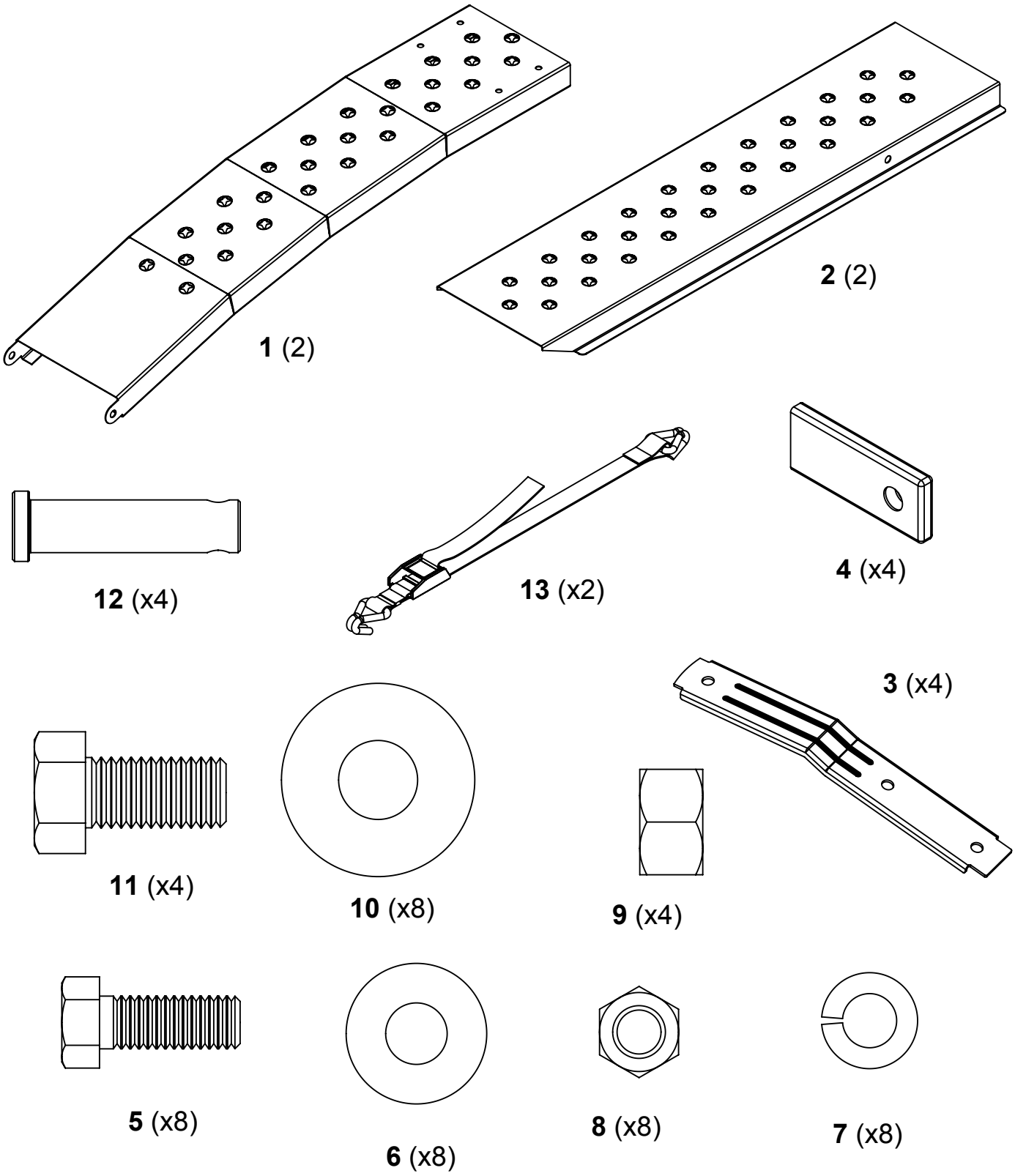

TOOLS REQUIRED FOR ASSEMBLY:

- 3/4" Wrench or Socket
- 9/16" Wrench or Socket
- Adjustable Wrench

Assembly Instructions

1 Attach support bars to ramp top.
Tighten bolts at this time. Slide support bar pads onto bars as shown.

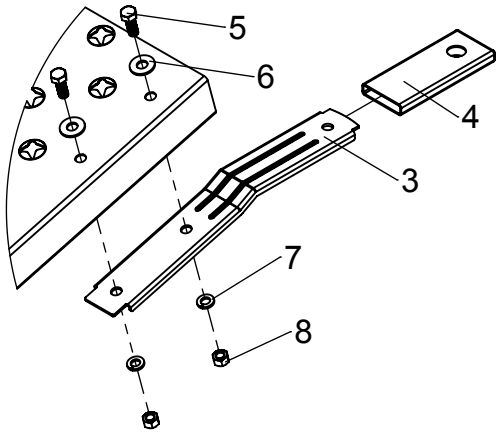

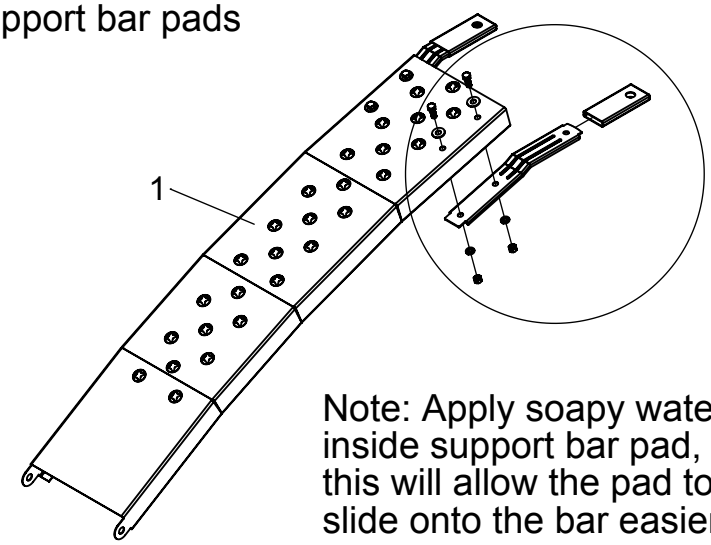

Note: Apply soapy water inside support bar pad, this will allow the pad to slide onto the bar easier.

2 Invert ramp bottom so that flanges face up. Place ramp top inside the ramp bottom so that the side holes of each are in line. Be sure to place a washer between the two ramp pieces to allow hinge to work properly.

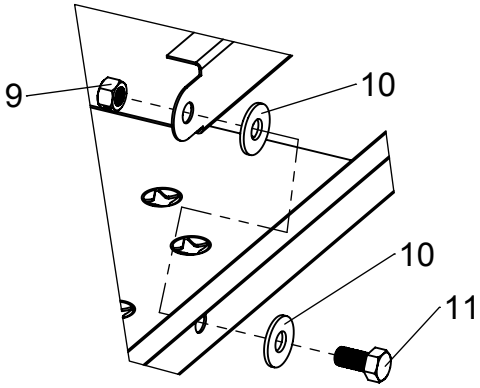

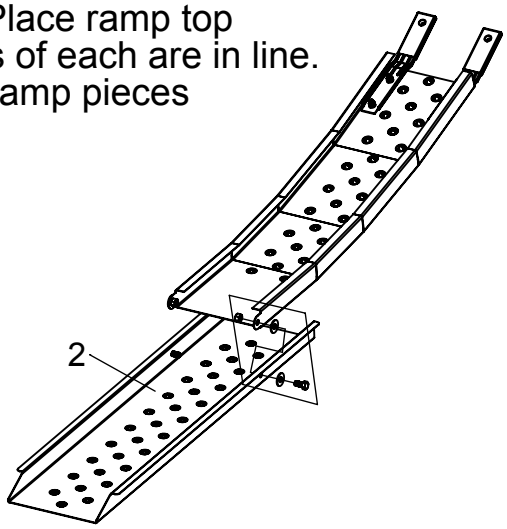

Note: DO NOT OVER TIGHTEN. Ramp must be able to swivel.

3 Repeat steps 1 and 2 for second ramp.

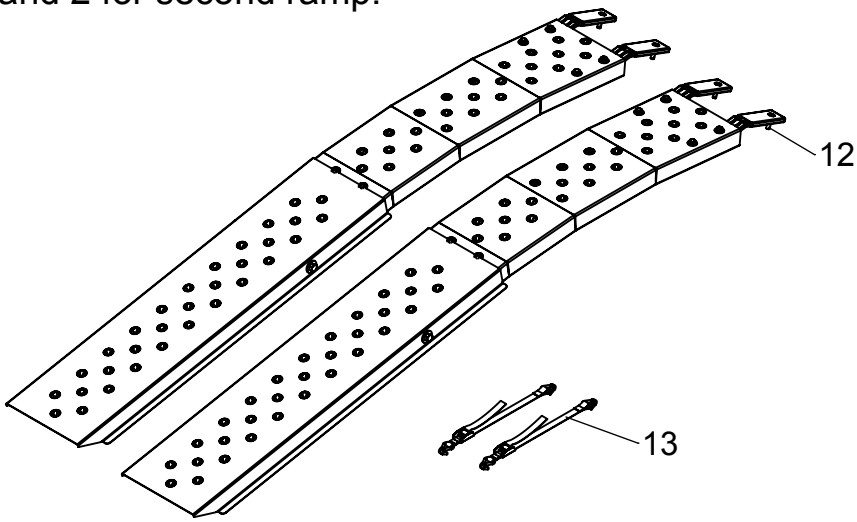

Operating Instructions

USAGE:

Look for a wall or depression to reduce the loading angle, the lower the ramp angle the easier the loading of the vehicle will be.

Park the loading vehicle on flat, firm, or grassy terrain.

Set the emergency brake and chock the tires of the loading vehicle to prevent any movement while loading and unloading the equipment.

Center loading ramp on the loading surface with support bars on top.

Make sure ramps are aligned at the proper distance apart so that the tires of the equipment being loaded are centered on the ramp.

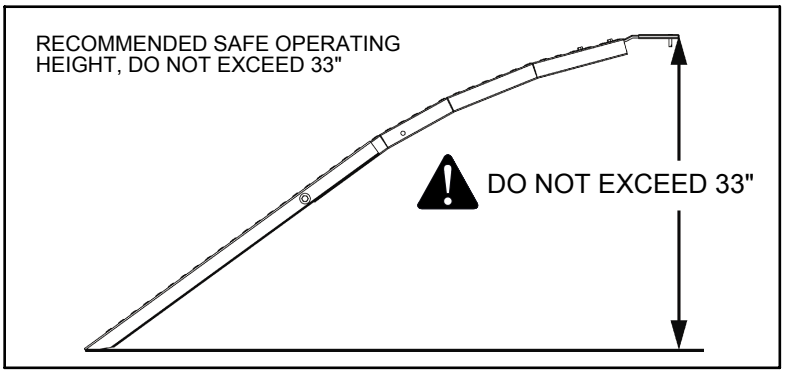

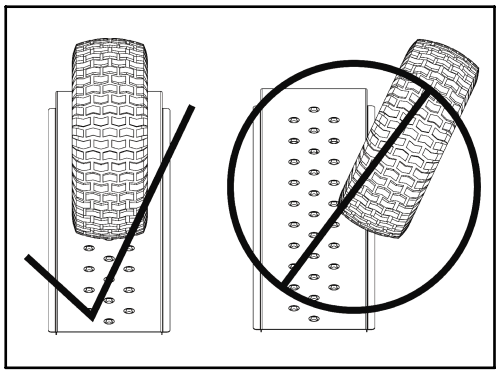

To prevent kickback, always attach cam buckle straps between the center of the loading ramps and the loading vehicle. Use supplied clevis pins to secure ramps to vehicle as needed.

For safety, always roll or winch equipment up or down the ramp. **NEVER** attempt to ride equipment up or down the loading ramp.

MAINTENANCE:

Before each use, always check for any worn, loose, or damaged parts on the loading ramps. If any damage is present, **DO NOT USE THE RAMP**.

Periodically check the fasteners to make sure they are still tight and in place.

Keep Ramp surface clean by occasionally cleaning with water and any mild detergent.

STORAGE:

Fold ramp in half for proper space saving storage. Store in a clean, dry area only.

If there are any missing parts, or if you have any questions on assembly, operation, maintenance or safety, please call: **1-800-652-6231**

Warranty

If this product fails due to a defect in material or workmanship within TWO YEARS from the date of purchase, we will at our option repair or replace it free of charge.

This warranty does not cover:

- Repairs necessary because of operator abuse or negligence.
- Equipment used for commercial or rental purposes.
- Paint that is worn or faded due to normal use or exposure.

To arrange for product repair call 1-800-652-2321, or return this product to place of purchase for replacement.

This warranty gives you specific legal rights, and you may also have other rights which may vary from state to state. This warranty applies only while this product is in use in the United States.

In the space below record the purchase date of your Loading Ramps.
Model Number **10-84C** _____

Purchase Date _____

Keep this Owner's Manual and your receipt in a safe place for future reference.

After the two year warranty period all replacement parts may be ordered by calling **1-800-652-2321**.

When ordering replacement parts, always give the following information:

- Product **1200 lb STEEL ARCHED LOADING RAMPS**
- Model Number **10-84C** _____
- Part Number _____
- Part Description _____

Repair Parts

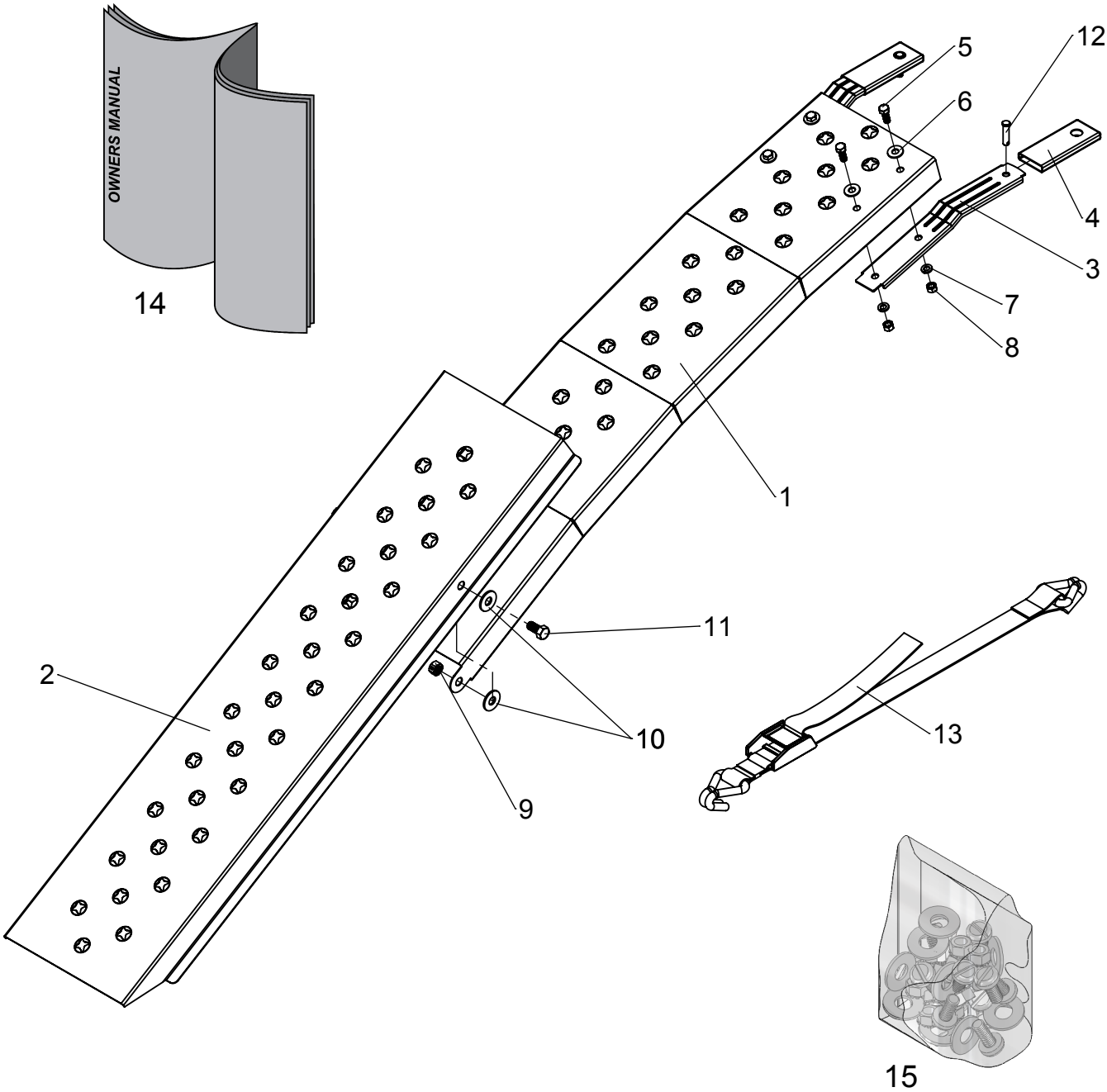

ITEM	PART NO	DESCRIPTION	QTY	ITEM	PART NO	DESCRIPTION	QTY
1	403411	STEEL RAMP, TOP	2	9	300068	1/2-13 C-LOCK HEX NUT	4
2	403421	STEEL RAMP, BOTTOM	2	10	300075	WASHER, 1/2" USS	8
3	403431	SUPPORT BAR	4	11	3000510	1/2-13 X 1" HEX BOLT	4
4	300261	PAD, SUPPORT BAR	4	12	3000819	CLEVIS PIN, 3/8" X 1-1/2"	4
5	3000511	HEX BOLT, 3/8-16 X 1"	8	13	303171	CAM BUCKLE STRAP	2
6	3000720	WASHER, 3/8" USS	8	14	303045	OWNERS MANUAL	1
7	300078	LOCKWASHER, 3/8"	8	15	303031	HARDWARE BOLT BAG	1
8	300069	HEX NUT, 3/8-16	8				

OHIO STEEL INDUSTRIES

Designed And Tested In Columbus, Ohio

Manufactured In The U.S.A. From Domestic
And Imported Components

7 16504 12384 7

MODEL # 10-84C

2575 Ferris Road Columbus, OH 43224
(800) 652-2321

www.ohiosteel.com

(800) 652-2321