Repair Parts

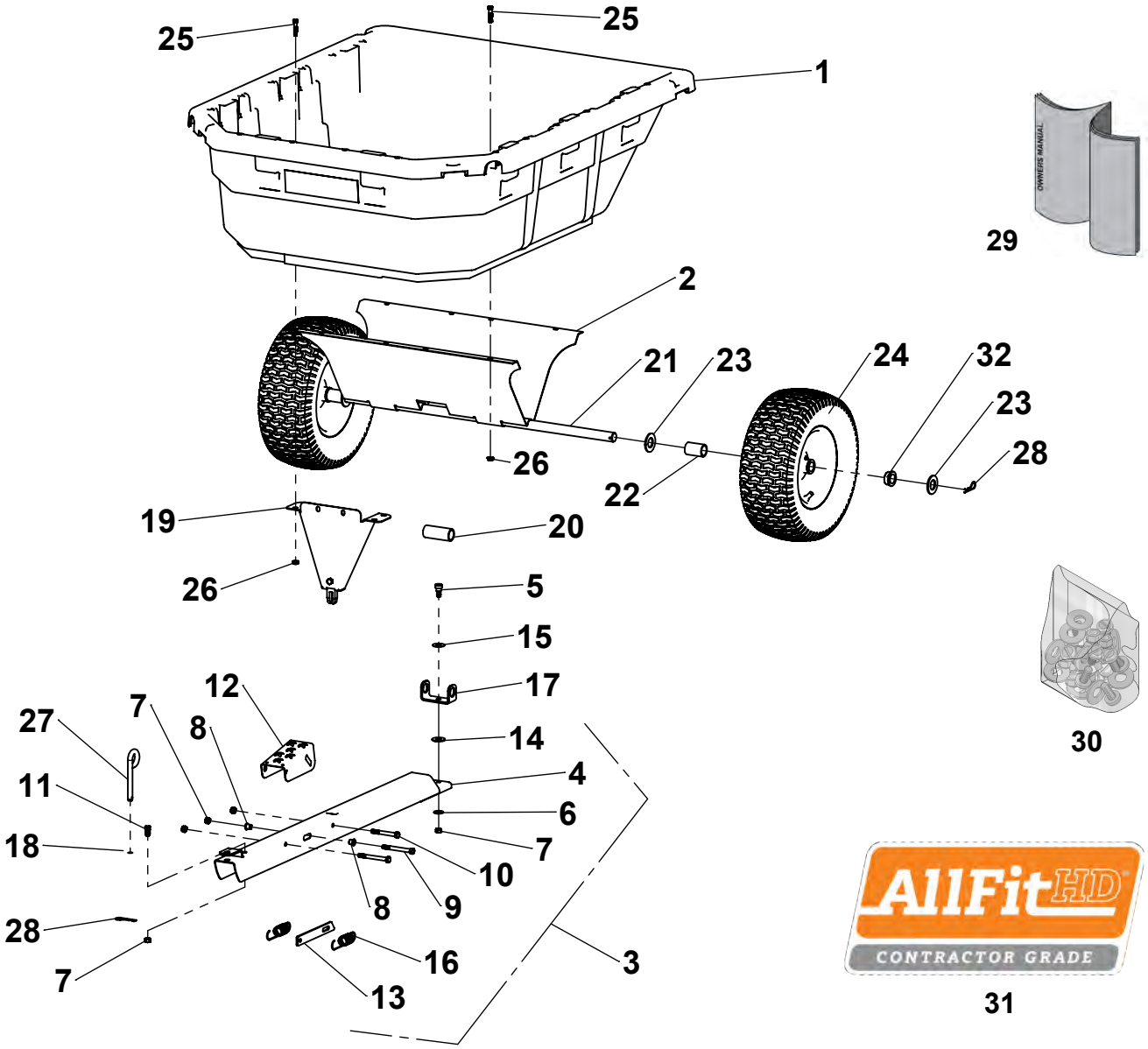

ITEM	PART NO	DESCRIPTION	QTY	ITEM	PART NO	DESCRIPTION	QTY
1	311161	Poly Body	1	18	401121	Hitch Bracket	1
2	6000404	Undercarriage	1	19	6000310	Front Support	1
3	6000315-G	Drawbar Assembly (incl 4-18)	1	20	6000463	Spacer	1
5	6000369	Shoulder Bolt	1	21	300002	Axle	1
6	3000720	3/8" USS Flat Washer	1	22	6000382	Spacer	2
7	300061	3/8-16 C-Lock Nut	5	23	300076	1" SAE Flat Washer	4
8	6000324	Bushing	2	24	300013	Wheel	2
9	6000370	3/8-16 x 3-1/2" Hex Bolt	2	25	3000528	5/16-18 x 1-1/2" Hex Bolt	12
10	300055	3/8-16 x 3" Hex Bolt	1	26	6000419	5/16-18 Flange Lock Nut	12
11	300052	3/8-16 x 3/4" Hex Bolt	1	27	6000533	Hitch Pin	1
12	6000305	Foot Pedal	1	28	300084	Hairpin Cotter, 2-5/16"	3
13	6000309	Latch	1	29	6000722	OWNERS MANUAL	1
14	300075	1/2" USS Washer	1	30	6000385	HARDWARE BOLT BAG	1
15	6000368	Spring Washer	1	31	6000695	DECAL, ALLFITHD CG	1
16	6000325	Latch Spring	2	32	6000810	KIT, 1" WHEEL BUSHINGS	1
17	6000312	Swivel Clevis	1				